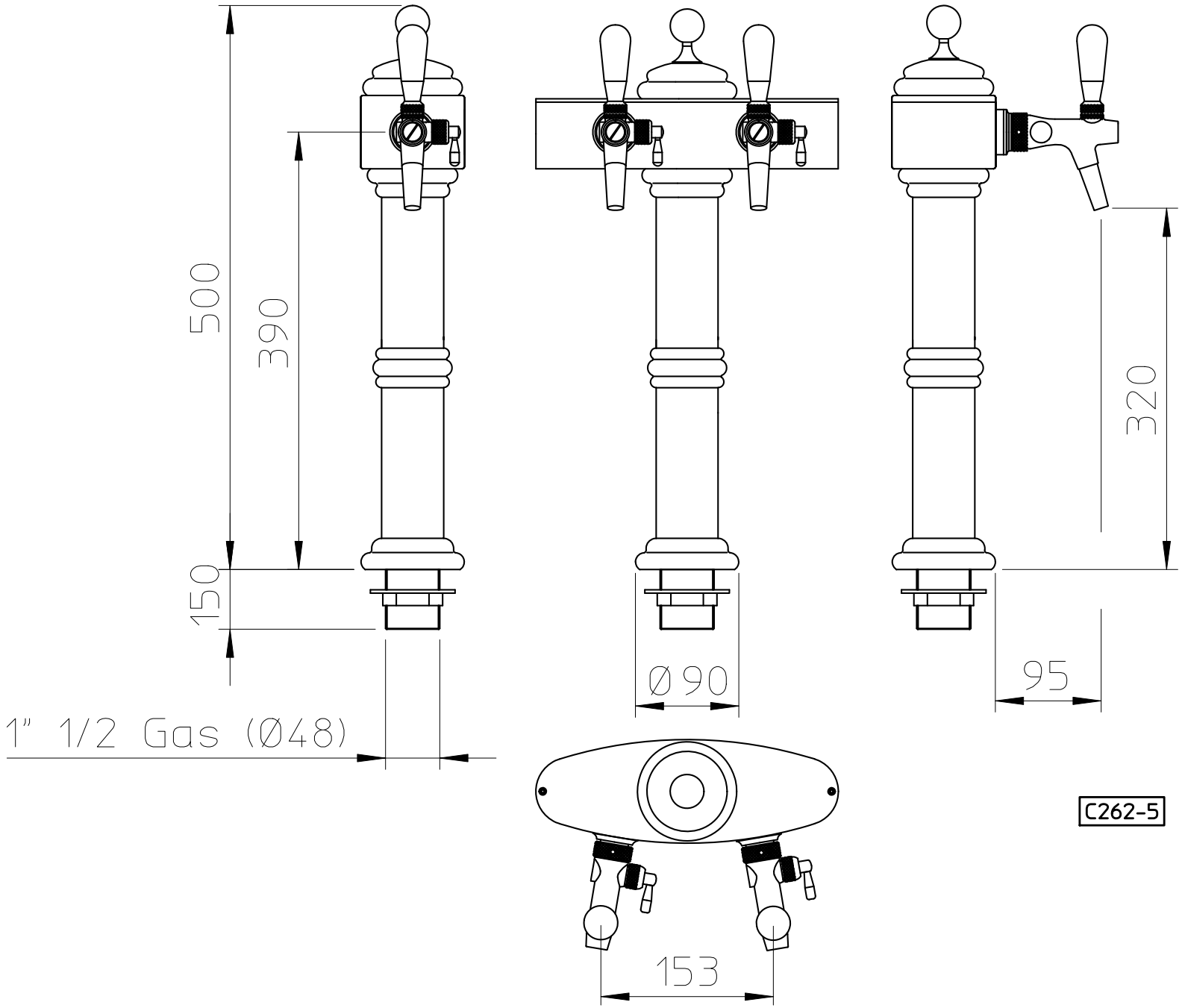
500
390
150
1" 1/2 Gas (Ø48)
Ø90
320
95
153
C262-5